FACTORY WORKS :
Dharam Power Transmission Equipments Pvt. Ltd.
Add : Plot No. 1492, Industrial Estates, HSIDC, Rai, Sonepat (HR)
Tel.: 0130 - 6453492, 2367897 Fax.: 2367896
e-mail : dharampower@gmail.com website : www.omexgears.com
DELHI REGISTERED OFFICE
E3, Mayapuri, 1st Floor, Phase-II, New Delhi-110064
PH. : 011-41694116, Fax : 011-41694113

OMEX

Power Transmission Equipments

OUR PRODUCT RANGE

- Helical Gear boxes
- Helical Geared Motors
- Bevel Helical Gear boxes
- Worm Gear boxes
- Geared Couplings
- Helical Extruder Gear boxes
- Shaft Mounted Reducers
- Crane Duty Helical Gear boxes
- Mill Duty Helical Gear boxes up to 1500 HP
- EOT Over Head Cranes up to 150 tons
- Electric Wire Rope Hoist up to 32 tons

Dealer Stamp

E C O Series Speed Reducers

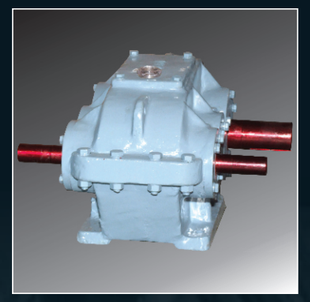

Dharam Power Transmission Equipments Pvt. Ltd.

company PROFILE

About Us

Our Company, Dharam Power Transmission Equipments Pvt. Ltd. specializes in the design, development, production and marketing of high quality Power Transmission Equipments, to the highest specifications, with proven performance in diverse industries across the globe. An accent on quality combined with ongoing research and development has given us international reputation for excellence. Despite this growth, we ensure that our customers receive due attention, with higher quality products and scheduled deliveries. As a customer focus & technology driven organization offering quality products & services is our forte. By updating technology & infrastructure, we have continued to deliver high value products to our customers.

Our Products Range

Our gears & gear boxes are widely available under the brand name "OMEX". Maintaining the pace with time, we have carved a niche for ourselves within the industry. We are an established manufacturer, exporter & OEM (Original Equipment Manufacturer) supplier of a wide range of industrial gears, gearboxes and custom made gears.

Our wide line of products include:

- Industrial Gears
- Helical Gear Boxes
- Worm Gear Boxes
- Gear Cases
- Worm/Worm Wheels
- Wheel Shafts
- Extruder Gear Boxes
- Bevel Helical Gear Boxes
- Gear Couplings.

Our Quality

At Dharam Power, high quality standards pervade every aspect of our operations. Quality is an integral element at every stage - designing, development, engineering, production and planning process. By integrating our streamlined production methodologies with a strong quality focus, we are able to manufacture products at par with established international standards. Therefore, right from product planning, selecting of raw materials, production, quality inspection & other quality control methods like Profile Grinding of Gear, Special Heat Treatment of Material. The Teamwork Management is held for the whole process of gear making. Stringent quality management system is backed by strong regulatory standards that ensures that we maintain an unwavering focus on excellence throughout our products and processes. Consistent improvement is a requirement rather than an option with us.

Machinery Used

In our company, the machinery used are well working with great accuracy results. Certain machinery we use in our company are generally Swiss made or made in Germany.

Our wide line of machinery includes

- Reishaur Gear Grinders
- Gear Grinders up to capacity of 1200 mm
- Surface Grinders
- Cylindrical Grinders
- Bore Grinders
- Gear Hobbing up to capcity of 2000 mm
- Boring Machines
- Horizontal machining centers
- Turning Centers

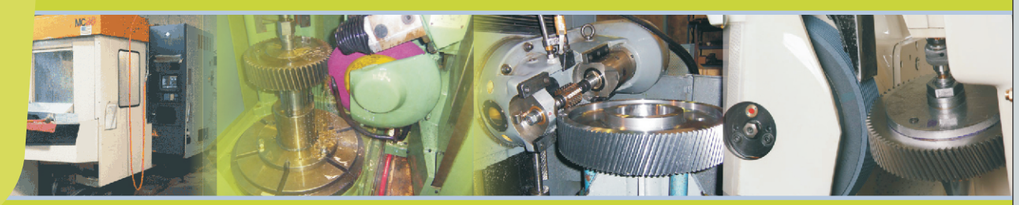

FEATURES

• The rigid, vibration-damping housing of close grained cast iron enables to take up & transmit safely all forces & loads.
• Maximum thermal efficiency is ensured by a large oil reservoir. Splash lubrication ensures ample and positive oil flow to all gears and •
• bearings.
• To ensure correct tooth contact, parallelism of bearing bores are maintained with precise tolerance.
• High efficiency of over 98% per stage of reduction achieved when loaded to full capacity of the units. The precision gearing and
• accuracy of bearing alignment preserves this high efficiency.
• Shafts of carbon steel are machined to high precision tolerance to ensure concentricity of bearing seats with gear teeth.
• The gear teeth are precision cut to involute shape, designed to give maximum tooth contact and overlap.
• Anti-friction type bearings are used throughout to ensure high efficiency and for maintaining the precision tolerance required between
• the gear centres.
• Positive seals prevent oil leakage at both high speed and low speed shafts.

SPECIFICATIONS

HOUSINGS - Housings are of cast iron, generously proportioned to ensure proper radiation of heat generated when Units are operated at their maximum capacity. Suitable ribs are placed underneath the bearing seats for strength and the walls are of sufficient thickness to withstand the most severe stresses encountered during operation.

GEARS AND PINIONS - The Gears are generated with highest accuracy on Hobbing Machine. The materials for the Pinion and Gear Wheel or Gear Wheel Rim are made of hard wearing special steel of graded strength to meet the individual load conditions. The selection of module, tooth profile and helix angle is made in conformity with speeds, ratios and load conditions to give maximum tooth contact and overlap, thus ensuring most favourable meshing and silent running.

SHAFTS - Shafts having Pinions cut integral are of heat treated alloy steel bar or alloy steel forging. All other shafts are of heat treated Carbon Steel and are finished to high precision tolerance by grinding.

BEARINGS - Anti-friction bearings of ample size are used throughout to ensure long service life. The use of antifriction bearings ensures high efficiency, correct centre distance and proper shaft alignment. In case of extra overhung loads due to pulley, pinion etc. on Shafts, reinforced extra heavy bearings are used. Oil Seals on both high speed and low speed shafts prevent oil leakage and provide protection for the bearings from dust and dirt.

LUBRICATION - For normal speeds, splash lubrication is provided by the gears dipping in oil. Oil reservoir is of ample size to ensure cool operation. The oil level indicator located in the housing is to ensure a proper amount of lubricant in the housing. Wherever splash lubrication is not effective to carry oil to gears and bearings, a built-in or separately mounted lubrication oil pump is used for forced-feed lubrication.

COOLING - The heat generated within the gear units is dissipated by a sufficiently large surface area of the housing. For higher capacities the units are provided with cooling coils in the lower part of the housing for allowing cool water passing through a coil through a suitable port entry. With pressure lubrication, an oil cooler can be mounted in the oil circuit to achieve more efficient and effective cooling.

EFFICIENCY - Efficiency of approximately 98% are obtained in the Single Reduction Units, 96% in the Double Reduction Units and 94% in the Triple Reduction Units. REDUCTION RATIOS - Single Reduction Units from 1.8:1 to 8:1, Double Reduction Units from 8:1 to 45.5:1 and Triple Reduction Units from 30:1 to 160:1 can be supplied. Ratios not shown in the catalogue can also be provided on special request.

Applications

These speed reducers are specially and economically designed for industries as follows:

- Paper Mills
- EOT & HOT Cranes
- Sugar Mills
- Conveyers
- Stone Crushers
- Winches
- Good Lifts
- Wire Drawing Machines
- Rolling Mills

And can fulfil the needs of many kinds of industries as per application

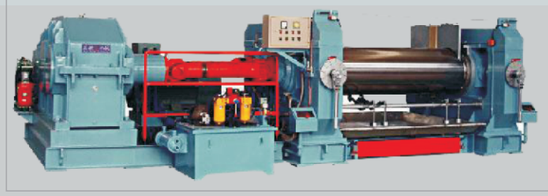

HA

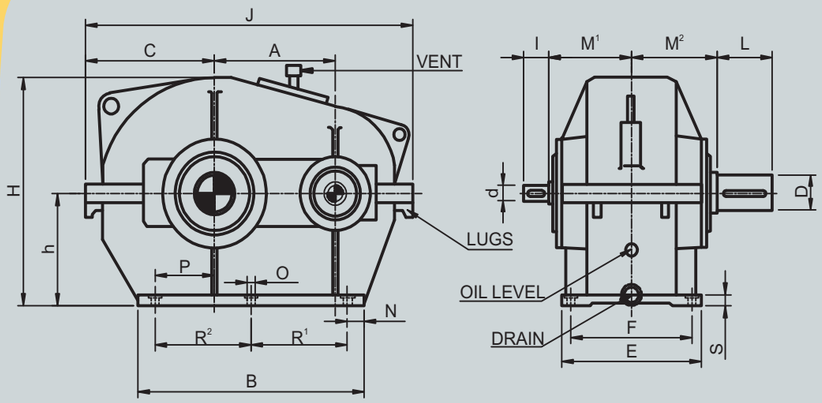

TYPES OF SHAFT ARRANGEMENT

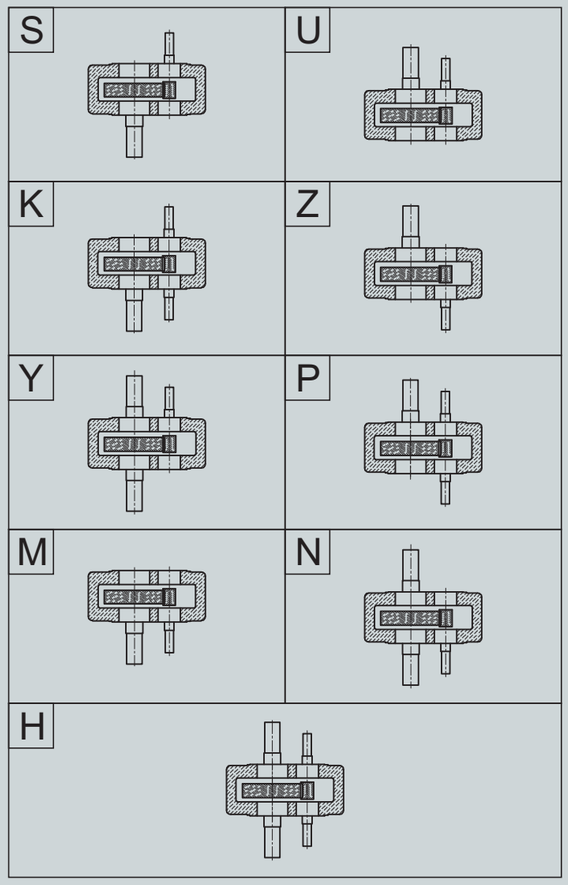

HA SERIES	Input Shaft			Output Shaft			HOUSING DIMENSION								FOUDATION HOLE DETAILS							WEIGHT (Approx. Kg.)
	d	l	M¹	D	L	M²	A	B	C	E	F	h	H	J	O	N	P	R¹	R²	S	No.	
100	30	60	82	35	55	92	100	260	180	154	115	125	233	375	15	22	40	170		18	04	39
150	40	85	100	55	58	115	150	330	225	190	150	170	323	490	17	25	45	230		22	04	80
200	50	85	155	80	120	125	200	410	275	225	180	225	423	617	17	25	55	300		25	04	136
250	60	108	205	80	120	160	250	505	330	300	230	265	515	745	25	30	85	190	190	25	06	250
300	60	108	220	80	120	175	300	580	420	330	260	315	610	910	25	30	115	230	230	30	06	327
350	90	135	242	110	145	228	350	695	465	385	315	375	697	1035	32	40	155	280	280	35	06	610
400	90	135	250	110	145	235	400	870	500	400	320	425	792	1153	32	40	190	350	350	35	06	820

Ratio	Duty	Size of Gear Unit																				
			100			150			200			250			300			350			400	
		Power Ratings According to Nominal Input Rpm (in HP)																				
		750	1000	1500	750	1000	1500	750	1000	1500	750	1000	1500	750	1000	1500	750	1000	1500	750	1000	1500
1.8	I	19	25	34	65	82	111	139	178	240	270	346	467	520	664	896	820	1050	1418	1225	1570	2120
	II	14	18	24	46	59	80	100	126	170	192	246	332	370	470	635	580	735	992	870	1020	1377
	III	11	13	18	37	45	61	76	98	132	151	190	257	286	364	491	450	575	776	673	865	1168
	IV	8	11	15	28	36	49	61	78	105	119	152	205	229	292	394	360	460	621	538	690	932
2.3	I	17	21	28	57	71	96	125	158	213	244	308	416	453	572	772	720	910	1229	1080	1360	1836
	II	12	15	20	40	51	69	89	112	151	173	218	294	322	405	547	512	645	871	765	965	1303
	III	9	12	16	31	39	53	69	87	117	134	169	228	250	314	424	396	500	675	595	745	1006
	IV	7	9	12	25	31	42	55	69	93	107	135	182	199	252	340	317	400	540	475	597	806
2.8	I	14	18	24	49	53	72	109	135	182	210	260	351	392	485	655	620	768	1037	920	1142	1542
	II	11	13	18	36	37	50	79	96	130	153	184	248	286	344	464	452	545	736	670	810	1094
	III	8	10	14	27	29	39	62	74	100	120	143	193	223	266	359	352	423	571	523	628	848
	IV	7	8	11	23	23	31	50	59	80	98	114	154	172	214	289	272	337	455	405	502	678
3.5	I	13	16	22	43	53	72	98	120	162	192	235	317	344	420	567	545	667	900	818	1000	1350
	II	9	11	15	31	37	50	70	85	115	136	167	225	244	300	405	386	465	628	580	715	965
	III	7	9	12	24	29	39	54	66	89	105	130	176	189	231	312	300	367	495	450	552	745
	IV	6	7	9	19	23	31	43	52	70	84	104	140	151	185	250	240	294	397	360	440	594
4	I	11	14	19	36	46	62	86	110	149	170	218	294	290	374	505	470	605	817	710	909	1227
	II	8	10	14	26	32	43	61	76	103	121	153	207	206	260	351	334	420	567	505	630	851
	III	6	8	11	20	26	35	47	61	82	93	120	162	160	207	279	260	334	451	390	502	678
	IV	5	6	8	16	20	27	38	48	65	75	96	130	130	165	223	206	266	359	312	400	540
4.5	I	10	13	18	33	42	57	78	99	134	150	193	261	262	336	454	414	530	716	630	810	1094
	II	7	9	12	24	31	42	57	71	96	109	140	189	191	243	328	302	384	518	460	585	790
	III	5	7	9	18	24	32	44	55	74	84	108	146	145	188	254	232	297	401	352	455	614
	IV	4	5	7	15	18	24	35	43	58	69	84	113	118	146	197	186	231	312	277	352	475
5.6	I	8	10	14	28	34	46	67	81	109	130	159	215	226	275	371	358	437	590	535	652	880
	II	6	7	9	20	24	32	47	57	77	92	111	150	160	191	258	254	304	410	380	454	613
	III	4	5	7	15	18	24	36	43	58	79	85	115	123	146	197	195	232	313	292	346	467
	IV	4	4	5	13	15	20	30	36	49	58	69	93	102	120	162	161	190	257	240	283	382
6.5	I	7	8	11	23	28	38	54	66	89	105	129	174	182	223	301	290	354	478	433	528	713
	II	5	6	8	16	19	26	38	47	63	74	90	122	129	155	209	206	246	332	308	368	497
	III	4	4	5	12	15	20	29	35	47	57	69	93	99	118	159	158	188	254	236	280	378
	IV	3	3	4	10	12	16	24	29	39	47	56	76	82	97	131	131	154	208	195	230	311
8	I	5	7	9	18	22	30	43	53	72	83	102	138	147	179	242	214	262	354	320	390	527
	II	4	5	7	13	15	20	31	35	47	58	71	96	104	124	167	152	182	246	227	271	366
	III	3	3	4	10	12	16	24	28	38	45	54	73	80	95	128	117	139	188	174	207	279
	IV	2	3	4	9	10	14	20	24	32	37	44	59	66	78	105	96	114	154	144	170	230

DUTY I, II, III, IV power rating calculated by service factor 1.0(uniform load), 1.5(medium load), 2.0(heavy load), 2.5(extra heavy load) respectively

HB

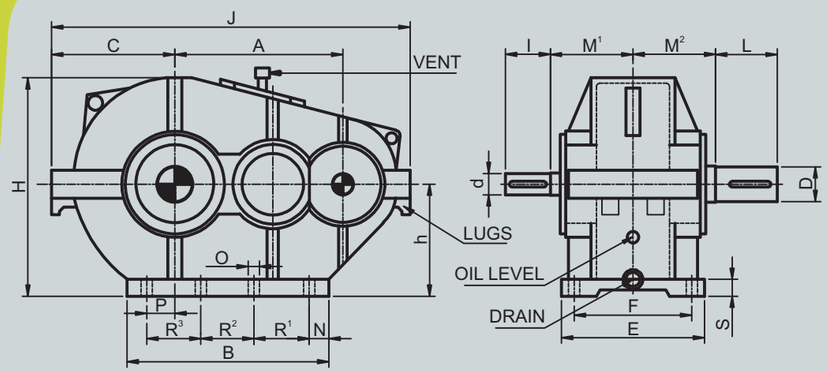

TYPES OF SHAFT ARRANGEMENT

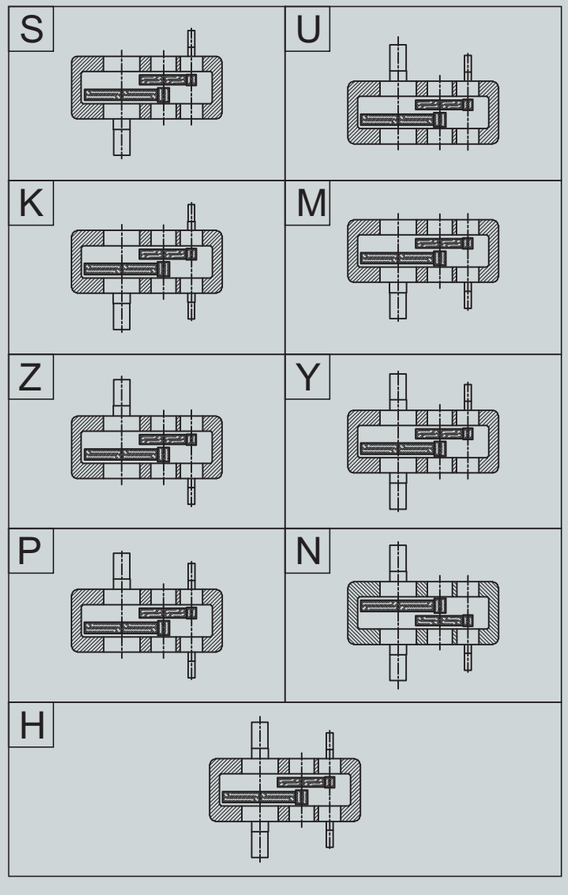

HB SERIES	Input Shaft			Output Shaft			HOUSING DIMENSION								FOUDATION HOLE DETAILS								WEIGHT (Approx. Kg.)
	d	I	M¹	D	L	M²	A	B	C	E	F	h	H	J	O	N	P	R¹	R²	R³	S	No.	
175	24	50	120	32	90	135	175	220	135	200	175	130	240	380	13	20	55	180			20	04	60
250	34	70	125	58	90	150	250	310	195	220	180	170	330	560	16	35	45	120	120		25	06	115
300	38	80	150	60	110	150	300	355	218	255	190	200	380	680	20	35	50	145	145		30	06	170
350	48	80	170	80	125	175	350	415	235	290	250	220	420	710	18	40	60	155	155		20	06	200
400	48	80	185	80	125	190	400	490	285	310	270	250	505	825	18	30	80	190	190		25	06	300
500	58	90	210	118	145	215	500	620	335	360	310	300	590	925	18	50	110	240	240		25	06	415
650	58	100	275	115	165	265	650	840	450	480	410	450	850	1325	28	85	155	215	215	215	33	08	1215
750	60	110	310	120	165	335	750	1025	455	510	450	480	905	1410	28	100	230	275	275	275	35	08	1415
850	85	130	325	130	200	335	850	1105	550	570	510	530	1010	1640	33	80	250	300	300	300	38	08	2080
1000	85	140	380	170	240	390	100	1350	640	660	590	580	1125	1896	33	100	350	350	350	350	38	08	3550

Ratio	Duty	Size of Gear Unit																													
		175			250			300			350			400			500			650			750			850			1000		
		Power Ratings According to Nominal Input Rpm (in HP)																													
		750	1000	1500	750	1000	1500	750	1000	1500	750	1000	1500	750	1000	1500	750	1000	1500	750	1000	1500	750	1000	1500	750	1000	1500	750	1000	1500
8	I	14	17	23	19	24	32	31	40	53	43	55	74	60	75	101	147	184	248	274	358	483	485	610	824	815	1024	1382	1630	2050	2768
	II	9	12	16	13	17	23	21	28	38	30	39	53	42	54	73	102	126	170	201	252	340	340	435	587	570	702	948	1086	1367	1845
	III	7	9	13	10	13	18	17	21	29	24	30	41	34	41	55	75	96	130	160	196	265	250	302	408	413	468	632	835	1050	1418
	IV	5	6	9	7	9	12	12	15	20	17	21	28	26	33	45	52	65	88	113	143	193	161	204	275	285	330	446	588	739	998
10	I	11	14	19	16	20	27	26	33	45	37	46	62	53	66	89	124	153	207	244	306	413	410	510	689	689	857	1157	1378	1714	2314
	II	8	10	14	11	14	19	18	23	31	25	33	45	37	45	61	86	107	144	170	210	284	284	356	481	478	587	792	918	1142	1542
	III	6	8	11	8	11	15	13	18	25	20	25	34	30	37	50	62	76	103	135	171	231	193	238	321	319	391	528	706	878	1185
	IV	4	5	7	6	7	9	10	12	16	14	17	23	22	29	39	41	52	70	92	118	159	152	165	223	220	270	365	493	622	840
12	I	10	12	16	14	17	23	23	28	38	31	39	53	46	57	77	104	129	174	208	263	355	342	432	583	574	726	980	1148	1452	1960
	II	6	9	12	9	12	16	15	20	27	22	27	36	32	39	53	71	92	124	145	181	244	238	306	413	395	497	671	765	968	1307
	III	5	7	10	7	10	14	12	17	22	17	21	28	25	32	43	51	64	86	114	144	194	159	203	274	255	331	447	546	691	933
	IV	4	4	6	5	6	8	8	10	13	12	15	20	19	24	32	35	43	58	77	96	130	109	136	184	180	233	315	382	490	662
14	I	8	11	14	11	15	20	18	25	33	25	34	46	39	50	68	84	111	150	175	221	298	279	370	500	469	622	840	938	1244	1679
	II	5	6	9	7	9	12	12	15	20	18	23	31	26	34	46	59	76	103	120	150	203	197	255	344	323	426	575	625	802	1083
	III	4	6	8	6	8	11	10	13	18	14	18	24	21	26	35	42	49	66	93	118	159	134	167	225	215	284	383	446	572	772
	IV	3	4	5	4	5	7	7	8	11	9	13	18	15	19	26	29	34	46	62	78	105	93	116	157	153	200	270	314	402	543
20	I	6	9	12	8	12	16	13	20	27	21	26	35	35	44	59	62	78	105	156	199	269	228	292	394	333	426	575	666	852	1150
	II	4	6	8	6	8	11	10	13	18	15	19	26	24	31	42	43	55	74	108	136	184	155	195	263	228	292	394	475	591	798
	III	3	4	6	4	6	8	7	10	13	10	14	19	19	24	32	29	37	50	71	90	122	100	129	174	152	195	263	339	422	570
	IV	2	3	4	3	4	5	5	7	9	7	9	12	13	17	23	20	25	34	49	60	81	69	85	115	108	139	188	240	297	401
25	I	5	7	10	7	10	14	12	17	22	19	13	18	32	39	53	57	72	97	142	181	244	208	264	356	304	385	520	608	770	1040
	II	4	5	7	5	7	9	8	12	16	13	17	23	21	27	36	40	50	68	97	123	166	140	176	238	211	269	363	419	531	717
	III	3	4	5	4	5	7	7	8	11	9	13	18	17	21	28	27	34	46	63	81	109	90	119	161	136	179	242	299	379	512
	IV	2	2	3	3	3	4	5	5	7	6	8	11	12	15	20	18	23	31	44	54	73	63	78	105	97	128	173	210	267	360
32	I	4	5	7	6	7	9	10	12	16	14	18	24	23	30	41	47	61	82	108	138	186	159	206	278	232	301	406	462	602	813
	II	3	4	5	4	5	7	7	8	11	9	13	18	17	22	30	34	42	57	77	95	128	111	142	192	159	206	278	318	415	560
	III	2	3	4	3	4	5	5	7	9	7	9	12	12	15	20	23	29	39	49	62	84	74	92	124	106	137	185	220	296	400
	IV	1	2	3	2	3	4	3	5	7	5	6	8	8	10	14	16	20	27	34	42	57	51	63	85	76	98	132	155	208	281
39	I	3	4	6	4	6	8	7	10	13	10	14	19	21	25	34	37	48	65	88	113	153	125	163	220	182	238	321	366	476	643
	II	2	3	4	3	4	5	5	7	9	7	10	14	15	18	24	25	34	46	61	78	105	86	109	147	125	163	220	250	328	443
	III	1	2	3	2	3	4	3	5	7	5	7	9	9	13	18	17	22	30	38	48	65	53	68	92	83	109	147	173	234	316
	IV	1	1	2	2	2	3	3	3	4	5	5	7	7	9	12	14	18	24	31	38	51	46	57	77	68	88	119	140	187	253
42	I	3	4	5	4	5	7	6	9	12	9	13	17	19	23	30	33	43	58	79	102	137	113	147	198	164	214	289	329	428	578
	II	2	3	3	3	4	5	4	6	8	6	9	12	14	16	22	23	31	41	55	70	95	77	98	132	113	147	198	225	295	399
	III	1	2	3	2	3	4	3	4	6	5	6	9	8	12	16	15	20	27	34	43	58	48	61	83	75	98	132	156	211	284
	IV	1	1	2	2	2	2	3	3	4	4	5	7	6	8	11	13	16	22	28	34	46	41	51	69	62	79	107	126	168	227
46	I	3	4	5	4	5	7	7	8	11	9	13	18	18	23	31	31	41	55	73	95	128	104	135	182	152	197	266	307	394	532
	II	1	2	3	2	3	4	3	5	7	6	8	11	12	16	22	22	28	38	49	65	88	74	92	124	104	135	182	211	271	366
	III	1	1	2	2	2	3	3	3	4	4	6	8	8	11	15	14	18	24	31	41	55	44	58	78	69	90	122	146	193	261
	IV	1	1	2	1	2	3	2	3	4	3	4	5	5	7	9	9	13	18	22	28	38	32	41	55	50	65	88	102	136	184

DUTY I, II, III, IV power rating calculated by service factor 1.0(uniform load), 1.5(medium load), 2.0(heavy load), 2.5(extra heavy load) respectively

HC

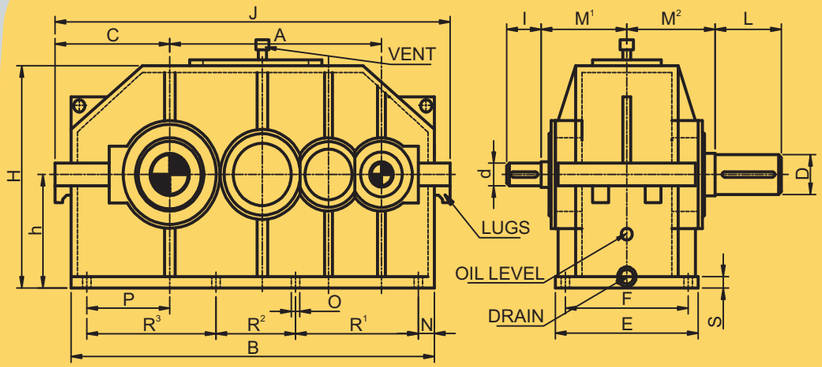

TYPES OF SHAFT ARRANGEMENT

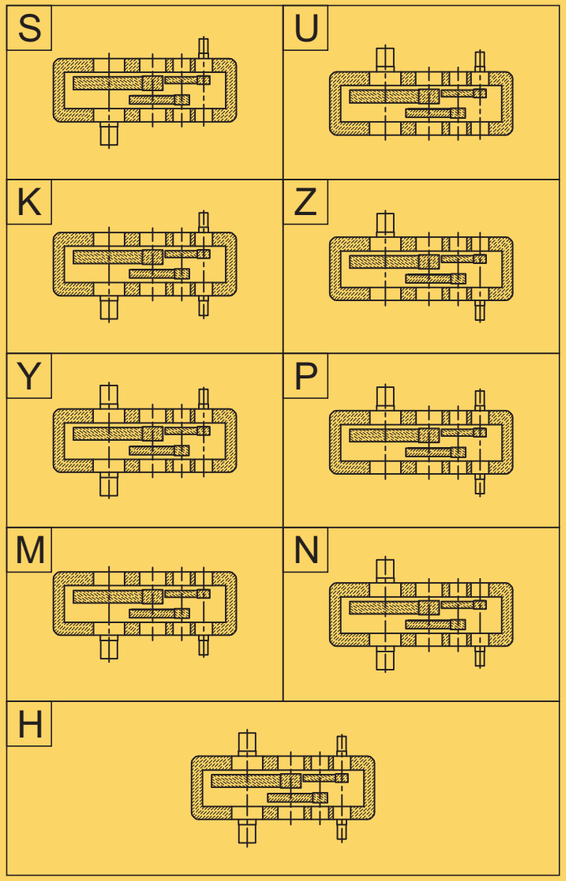

OMEX
Power Transmission Equipments

HC SERIES	Input Shaft			Output Shaft			HOUSING DIMENSION								FOUDATION HOLE DETAILS								WEIGHT (Approx. Kg.)
	d	I	M1	D	L	M2	A	B	C	E	F	h	H	J	O	N	P	R1	R2	R3	S	No.	
400	38	65	160	70	125	165	400	680	220	260	225	210	400	740	17	30	157	245	150	120	30	08	426
475	44	70	195	75	125	175	475	740	230	290	250	225	410	810	17	35	175	260	175	250	35	08	515
550	44	75	200	90	140	215	550	920	300	340	290	300	470	1000	20	35	180	290	235	290	40	08	680
650	54	100	255	118	145	260	650	1170	390	380	300	350	695	1270	30	55	275	400	280	370	35	08	935
710	55	75	255	125	220	265	710	1010	370	470	420	340	670	1250	20	100	210	360	300	210	35	08	1265
800	55	80	290	125	200	300	800	1300	360	530	450	400	800	1410	27	50	50	400	400	400	40	08	1740
900	65	100	320	140	225	330	900	1460	380	590	500	450	895	1580	30	55	55	450	450	450	42	08	2255
1000	70	105	350	170	250	365	1000	1620	440	650	560	500	995	1780	45	60	60	500	500	500	45	08	2915
1120	75	115	400	190	280	440	1120	1820	500	730	630	560	1105	1980	48	70	70	560	560	560	48	08	3850
1250	80	120	415	200	300	460	1250	2040	560	830	710	630	1235	2200	52	75	75	630	630	630	52	08	5170

Ratio	Duty	Size of Gear Unit																														
		400			475			550			650			710			800			900			1000			1120			1250		
		Power Ratings According to Nominal Input Rpm (in HP)																														
		750	1000	1500	750	1000	1500	750	1000	1500	750	1000	1500	750	1000	1500	750	1000	1500	750	1000	1500	750	1000	1500	750	1000	1500	750	1000	1500
30	I	13	17	23	22	28	38	37	47	63	52	66	89	74	95	128	107	137	185	153	196	265	211	270	365	300	380	513	418	529	714
	II	9	12	16	16	20	27	27	34	46	37	47	63	53	68	92	77	98	132	110	141	190	151	194	262	215	273	369	300	380	513
	III	8	10	14	13	17	23	22	28	38	30	39	53	44	56	76	63	81	109	90	116	157	124	159	215	177	224	302	247	312	421
	IV	6	7	9	9	12	16	16	20	27	22	28	38	32	41	55	46	59	80	66	84	113	91	116	157	129	163	220	180	227	306
40	I	11	14	19	18	24	32	31	39	53	44	56	76	60	78	105	87	112	151	126	162	219	172	221	298	246	311	420	340	431	582
	II	8	10	14	13	17	23	22	28	38	32	40	54	43	56	76	63	80	108	90	116	157	123	159	215	177	223	301	244	309	417
	III	6	8	11	11	14	19	18	23	31	26	33	45	36	46	62	52	66	89	74	96	130	101	130	176	145	183	247	201	254	343
	IV	5	6	8	8	10	14	13	17	23	19	24	32	26	33	45	38	48	65	54	70	95	74	95	128	106	134	181	146	185	250
50	I	9	11	15	15	19	26	25	32	43	36	46	62	50	65	88	72	93	126	105	135	182	144	184	248	205	260	351	288	364	491
	II	6	8	11	11	14	19	18	23	31	26	33	45	36	47	63	52	67	90	75	97	131	103	132	178	147	187	252	207	261	352
	III	5	7	9	9	16	22	15	19	26	21	27	36	30	38	51	43	55	74	62	80	108	85	109	147	121	153	207	170	215	290
	IV	4	5	7	9	8	11	11	14	19	16	20	27	22	28	38	31	40	54	45	58	78	62	79	107	88	112	151	124	157	212
60	I	7	10	14	12	16	22	21	26	35	30	38	51	42	54	73	61	78	105	86	110	149	119	152	205	168	213	288	237	300	405
	II	5	7	9	9	11	15	15	19	26	21	27	36	30	39	53	44	56	76	62	79	107	85	109	147	121	153	207	170	215	290
	III	4	6	8	7	9	12	12	16	22	18	22	30	25	32	43	36	46	62	51	65	88	70	90	122	99	126	170	140	177	239
	IV	3	4	5	5	7	9	9	11	15	13	16	22	18	23	31	26	33	45	37	47	63	51	65	88	72	92	124	102	129	174
75	I	6	8	11	10	13	18	17	21	28	24	31	42	34	44	59	49	63	85	69	88	119	96	123	166	136	172	232	194	246	332
	II	4	5	7	7	9	12	12	15	20	18	22	30	24	32	43	35	45	61	49	63	85	69	88	119	98	123	166	139	177	239
	III	3	4	5	6	8	11	10	13	18	14	18	24	20	26	35	29	37	50	40	52	70	57	73	99	80	101	136	114	145	196
	IV	3	3	4	4	6	8	7	9	12	10	13	18	15	19	26	21	27	36	29	38	51	41	38	51	58	74	100	83	106	143
90	I	5	7	9	9	12	16	15	19	26	21	27	36	30	39	53	44	56	76	63	81	109	86	110	149	124	157	212	175	221	298
	II	4	5	7	6	8	11	11	14	19	15	19	26	22	28	38	31	40	54	45	58	78	62	79	107	89	113	153	126	159	215
	III	3	4	5	5	7	9	10	11	15	13	16	22	18	23	31	26	33	45	37	48	65	51	65	88	73	93	126	103	130	176
	IV	2	3	4	4	5	7	7	8	11	9	12	16	13	17	23	19	24	32	27	35	47	37	47	63	53	67	90	75	95	128
105	I	5	6	8	10	11	15	14	18	24	20	25	34	27	35	47	40	51	69	58	74	100	78	100	135	112	142	192	156	197	266
	II	3	4	5	6	8	11	10	13	18	14	18	24	19	25	34	29	37	50	41	53	72	56	72	97	80	102	138	112	141	190
	III	3	4	5	5	6	8	8	10	14	12	15	20	16	21	28	24	30	41	34	44	59	46	59	80	66	84	113	92	116	157
	IV	2	3	4	3	4	5	6	8	11	8	11	15	12	15	20	17	22	30	25	32	43	33	43	58	48	61	82	67	85	115
120	I	4	5	7	7	9	12	11	14	19	16	20	27	22	28	38	33	42	57	46	59	80	65	83	112	91	115	155	128	162	219
	II	3	4	5	5	6	8	8	10	14	12	15	20	16	20	27	24	30	41	33	42	57	46	60	81	65	83	112	92	116	157
	III	2	3	4	4	5	7	7	8	11	10	13	18	13	17	23	19	25	34	27	35	47	38	49	66	54	68	92	75	96	130
	IV	2	2	3	3	4	5	5	6	8	7	9	12	9	12	16	14	18	24	20	25	34	28	36	49	39	49	66	55	70	95
135	I	4	4	6	6	8	11	10	13	17	14	18	24	20	25	34	29	38	51	41	53	71	58	74	100	81	103	139	114	145	195
	II	3	4	5	4	5	7	7	9	12	11	13	18	14	18	24	21	27	36	29	38	51	41	54	72	58	74	100	82	104	140
	III	2	3	4	4	4	6	6	7	10	9	12	16	12	15	20	17	22	30	24	31	42	34	44	59	48	61	82	67	86	116
	IV	2	2	2	3	4	5	4	5	7	6	8	11	8	11	14	13	16	22	18	22	30	25	32	43	35	44	59	49	63	84
160	I	3	4	5	5	8	11	9	11	15	13	16	22	18	23	31	26	33	45	37	48	65	51	66	89	73	93	126	103	130	176
	II	2	3	4	4	5	7	7	8	11	9	12	16	13	17	23	18	24	32	27	34	46	37	47	63	53	67	90	74	93	126
	III	2	2	3	4	4	5	5	7	9	8	10	14	11	14	19	15	19	26	22	28	38	30	39	53	44	55	74	61	77	104
	IV	1	2	3	2	3	4	4	5	7	6	7	9	8	10	14	11	14	19	16	21	28	22	28	38	32	40	54	44	56	76

DUTY I, II, III, IV power rating calculated by service factor 1.0(uniform load), 1.5(medium load), 2.0(heavy load), 2.5(extra heavy load) respectively

VC

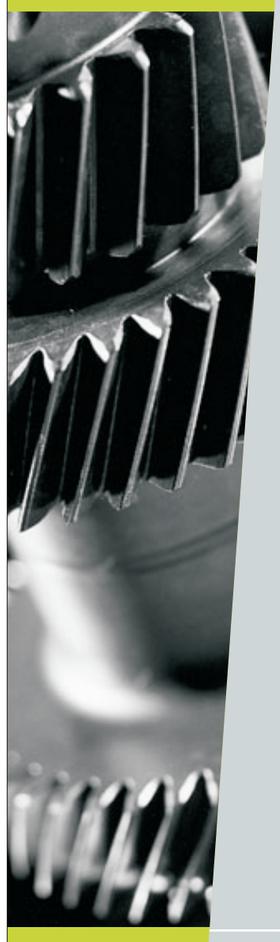

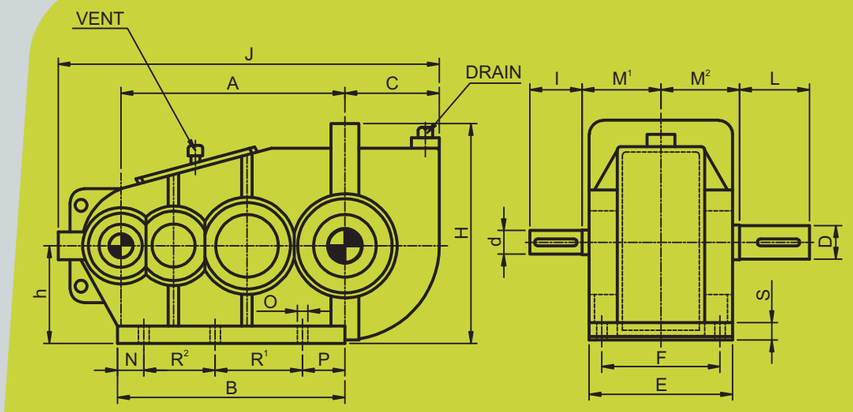

TYPES OF SHAFT ARRANGEMENT

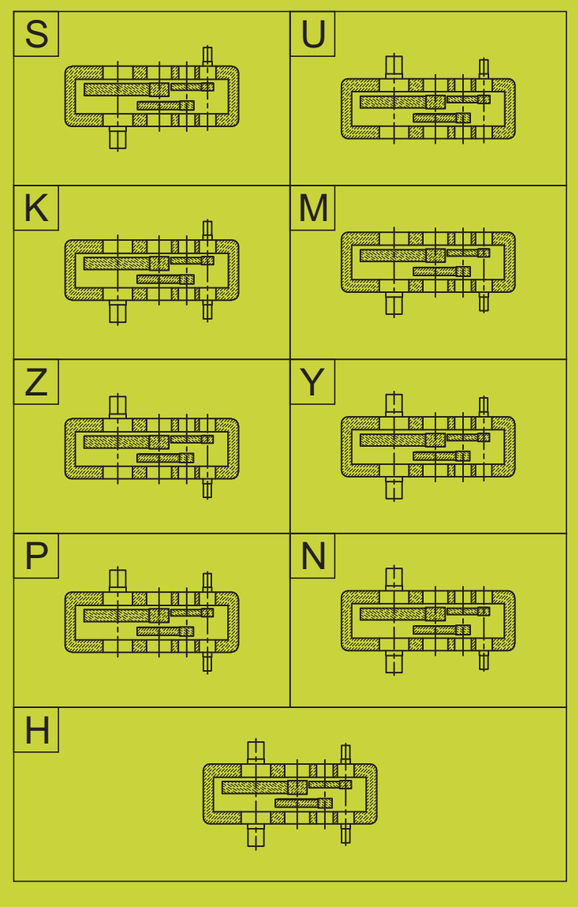

VC SERIES	Input Shaft			Output Shaft			HOUSING DIMENSION								FOUDATION HOLE DETAILS							WEIGHT (Approx. Kg.)
	d	l	M¹	D	L	M²	A	B	C	E	F	h	H	J	O	N	P	R¹	R²	S	No.	
280	24	60	115	38	90	115	280	245	110	180	150	120	250	480	14	50	40	140		15	04	130
320	28	65	130	48	100	120	320	315	140	220	160	145	310	550	14	40	55	160		20	04	160
350	28	65	140	48	100	145	350	280	135	225	185	150	320	595	17	60	60	160		20	04	180
400	34	75	140	48	100	145	400	335	170	235	195	150	390	700	13	55	45	110	120	30	06	220
500	38	105	155	60	110	160	500	400	195	270	220	205	455	875	18	60	50	100	190	18	06	255
550	38	105	195	80	105	185	550	560	215	285	245	235	490	880	18	120	50	70	320	30	06	310
600	38	105	210	80	120	215	600	625	240	350	305	250	570	975	18	130	50	70	375	35	06	350

Ratio	Duty	Size of Gear Unit																				
		280			320			350			400			500			550			600		
		Power Ratings According to Nominal Input Rpm (in HP)																				
		750	1000	1500	750	1000	1500	750	1000	1500	750	1000	1500	750	1000	1500	750	1000	1500	750	1000	1500
18	I	4	5	7	5	6	8	6	7	9	16	18	24	19	22	30	32	35	47	36	40	54
	II	3.5	3.5	5	3	4	5	4	5	7	11	12	16	14	16	22	23	25	34	26	31	42
	III	3.5	2.5	3	3	3	4	3	4	5	8	10	14	12	14	19	18	19	26	18	23	31
	IV	2	2.5	3	2	3	4	2.5	3	4	7	8	11	10	12	16	14	15	20	15	16	22
24	I	3	4	5	3	4	5	4	5	7	11	15	20	18	22	30	24	26	35	28	31	42
	II	2	3	4	2	3	4	3	4	5	9	11	15	14	14	19	17	20	27	20	24	32
	III	2	2	3	2	2	3	3	3	4	7	8	11	12	12	16	14	15	20	14	18	24
	IV	1	2	3	1	2	3	2	2	3	5	6	8	8	11	15	11	12	16	12	12	16
30	I	3	3	4	3	4	5	3	4	5	10	12	16	16	18	24	22	26	35	23	31	42
	II	2	2	3	2	3	4	2	3	4	7	9	12	12	14	19	15	18	24	16	21	28
	III	2	2	3	2	2	3	2	2	3	6	7	9	11	12	16	12	14	19	12	14	19
	IV	1	2	3	1	2	3	1.5	2	3	5	5	7	8	8	11	10	11	15	11	12	16
40	I	2	2	3	2	3	4	2	3	4	8	9	12	12	14	18	17	20	26	17	23	31
	II	2	2	2	2	2	3	2	2	3	5	7	9	9	11	14	11	14	18	12	16	21
	III	2	2	2	2	2	2	2	2	2	5	5	7	8	9	12	9	11	14	9	11	14
	IV	1	2	2	1	2	2	1	2	2	4	4	5	6	6	8	8	8	11	8	9	12
50	I	2	2	2	2	2	3	2	2	3	6	7	10	10	11	15	13	16	21	14	19	25
	II	1	1	2	1	2	2	1	2	2	4	5	7	7	8	11	9	11	15	10	13	17
	III	1	1	2	1	1	2	1	1	2	4	4	6	7	7	10	7	8	11	7	8	11
	IV	1	1	2	1	1	2	1	1	2	3	3	4	5	5	6	6	7	9	7	7	10
60	I	2	2	2	2	2	3	2	2	3	5	6	8	8	9	12	11	13	18	12	16	21
	II	1	1	1	1	2	2	1	2	2	4	5	6	6	7	9	8	9	12	8	11	14
	III	1	1	1	1	1	1	1	1	1	3	4	5	6	6	8	6	7	9	6	7	9
	IV	1	1	1	1	1	1	1	1	1	3	3	3	4	4	5	5	6	7	6	6	8
70	I	1	1	2	1	2	2	1	2	2	4	5	7	7	8	11	10	11	15	10	14	18
	II	.75	.75	1	.75	1	1.5	.75	1	1.5	3	4	5	5	6	8	7	8	11	7	9	12
	III	.75	.75	1	.75	.75	1	.75	.75	1	3	3	4	5	5	7	5	6	8	5	6	8
	IV	.5	.75	1	.5	.75	1	.5	.75	1	2	2	3	3	3	5	4	5	6	5	5	7
90	I	1	1	1	1	1	1.75	1	1	1.75	3	4	5	5	6	8	7	9	12	8	10	14
	II	.5	.5	.75	.5	.75	1	.5	.75	1	2	3	4	4	5	6	5	6	8	5	7	10
	III	.5	.5	.75	.5	.5	.75	.5	.5	.75	2	2	3	4	4	5	4	5	6	4	5	6
	IV	.3	.5	.75	.3	.5	.75	.3	.5	.75	2	2	2	3	3	4	3	4	5	4	4	5
105	I	.75	.75	.75	.75	.75	1.5	.75	.75	.5	3	3	5	5	5	7	6	8	10	7	9	12
	II	.4	.4	.5	.4	.5	.75	.4	.5	.75	2	3	4	3	4	6	4	5	7	5	6	8
	III	.4	.4	.5	.4	.4	.5	.4	.4	.5	2	2	3	3	3	5	3	4	6	3	4	6
	IV	.25	.4	.5	.25	.4	.5	.25	.4	.5	1	1	2	2	2	3	3	3	4	3	3	5
120	I	-	-	-	-	-	-	-	-	-	1	1	2	2	2	3	3	3	4	3	3	4
	II	-	-	-	-	-	-	-	-	-	1	1	2	2	2	2	2	3	3	3	3	4
	III	-	-	-	-	-	-	-	-	-	1	1	1	2	2	2	2	2	3	2	2	3
	IV	-	-	-	-	-	-	-	-	-	1	1	1	1	1	2	2	2	3	2	2	3

DUTY I, II, III, IV power rating calculated by service factor 1.0(uniform load), 1.5(medium load), 2.0(heavy load), 2.5(extra heavy load) respectively